www.turkishstudies.net/turkishstudies

Turkish Studies

eISSN: 1308-2140

Research Article / Araştırma Makalesi

Yaz Spor Okullarına Katılan Bireylerde Benlik Saygısı ve Psikolojik Dayanıklılık Düzeyleri Arasındaki İlişkinin İncelenmesi

Examining the Relationship Between Self-Esteem and Psychological Resilience Levels in Individuals Participating in Summer Sports Schools

Buşra Özcan[*] - Kürşat Arzuoğlu[**] - Yunus Şahinler[***]

Abstract: In this study, it was aimed to examine the relationship between self-esteem and psychological resilience levels in individuals attending summer sports schools. The research universe is Istanbul province. The sample group of the study is composed of a total of 493 volunteer women (238) and men (255) who do athletics, judo, gymnastics and taekwondo sports in summer sports schools in Bakırköy district. While the data was being collected, a personal information form was used to determine the socio-demographic information of the individuals, while the "Adolescent Psychological Resilience Scale" was used to determine their psychological resilience, and the "Rosenberg Self-Esteem Scale" was used to determine their self-esteem. The collected data were analyzed using the SPSS (Statistical Package for Social Sciences) 29.0 package program. Findings: Since the data sets showed normal distribution, frequency and mean values were used. Independent groups t-test, one-way variance analysis and tamhane test for multiple comparisons between different variables, correlation analysis for relationship and recreation analysis for effect were used. As a result, according to the findings obtained as a result of the analyses performed; It was determined that there were negative and positive relationships between psychological resilience and self-esteem of individuals and that adolescent psychological resilience positively and significantly affected self-esteem ($p<0.05$).

Keywords: Sports, Psychological Resilience, Self-Esteem

[*] Sorumlu Yazar: Dr., Siirt Üniversitesi, Beden Eğitimi ve Spor Yüksekokulu, Spor Yöneticiliği Bölümü, Spor Yönetim Bilimleri Anabilim Dalı.

Corresponding Author: Siirt University, School of Physical Education and Sports, Department of Sport Management, Department of Sport Management Sciences.

ORCİD https://orcid.org/000-0003-3619-8840

busraozcan@gmail.com

[**] Dr., Milli Eğitim Bakanlığı, Bakırköy İlçe Milli Eğitim Müdürü, Spor Bilimleri.

Ministry of National Education, Bakırköy District Director of National Education, Sports Sciences.

ORCİD https://orcid.org/0000-0001-8309-787X

k.arzuoglu@hotmail.com

[***] Dr., İstanbul Gelişim Üniversitesi, Spor Bilimleri Fakültesi, Engellilerde Egzersiz ve Spor Bilimleri Bölümü, Engellilerde Egzersiz Ve Spor Bilimleri Pr.

Istanbul Gelisim University, Faculty of Sport Sciences, Department of Exercise and Sport Sciences for the Disabled, Exercise and Sport Sciences for the Disabled Pr.

ORCİD https://orcid.org/0000-0002-5268-020X

ysahinler@gelisim.edu.tr

Cite as/ Atıf: Özcan, B., Arzuoğlu, K. & Şahinler Y. (2025). Yaz Spor Okullarına Katılan Bireylerde Benlik Saygısı ve Psikolojik Dayanıklılık Düzeyleri Arasındaki İlişkinin İncelenmesi. *Turkish Studies*, 20(2), 1157-1175. https://dx.doi.org/10.7827/TurkishStudies.80246

Received/Geliş: 10 January/Ocak 2025

Accepted/Kabul: 25 June/Haziran 2025

Published/Yayın: 30 June/Haziran 2025

Checked by plagiarism software

CC BY NC

Structured Abstract: This study aimed to examine the relationship between self-esteem and psychological resilience levels in individuals participating in summer sports schools.

The notion of psychological resilience is derived from the Latin root "resilire" (Masten, 2002), which signifies the quality of being flexible and elastic (Hunter & Chandler, 1999). Psychological resilience is a characteristic that can vary depending on the general structure including personal characteristics, age, gender, place, time and culture as well as the different situations they are in (Gürgan, 2006). Psychological resilience is defined as the ability to cope with stress and manage oneself by regulating the effects of stress (Luthar &Cichetti, 2000).

A review of these definitions reveals that psychological resilience cannot be interpreted within a single definition. However a synthesis of these definitions reveals some commonalities. The impact of psychological resilience is influenced by a variety of factors. including individual, familial and environmental elements. The concept of self as understood within the framework of psychological resilience, has emerged as a subject of discussion. The basis of self-esteem, therefore, is established on the existence of the respect and personal value that the individual has for himself. The self as defined here is the image that an individual creates about themselves and their environment following their entry into the world. From another perspective it is related to how we design ourselves. how we feel ourselves and what kind of thoughts we have.

In light of the aforementioned concepts, the objective of this research is to examine the relationship between self-esteem and psychological resilience levels in individuals enrolled in summer sports schools. In this context the following research questions will be addressed:

Is there a relationship between self-esteem and psychological resilience levels in individuals attending summer sports schools?

Does self-esteem have a significant effect on psychological resilience?

The research universe for this study is Istanbul province. The sample group of the research is composed of 493 volunteer women (238) and men (255) who do athletics, judo, gymnastics and taekwondo sports in summer sports schools in Bakırköy district. The collection of data was carried out through the administration of a personal information form which was utilized to ascertain the socio-demographic characteristics of the participants. The psychological resilience of the participants was assessed using the "Adolescent Psychological Resilience Scale." while their self-esteem was evaluated through the implementation of the "Rosenberg Self-Esteem Scale." The collected data were then subjected to analysis using SPSS (Statistical Package for Social Sciences) version 29.0. Following the transfer of the data to the computer environment and their organization with the Microsoft Excel package program. the conformity of the numerical data to the normal distribution was examined using Skewness (skewness) and Kurtosis (kurtosis) tests. Histogram and Q-Q Plot graphics. The analyses yielded the conclusion that the data originated from a normal distribution. The categorization of data is manifested through the presentation of frequency and percentage values while numerical data is represented by mean and standard deviation values due to the assumption of normality. The statistical tests employed for the analysis included the Independent Sample T-test. utilized for the comparison of two independent groups and the One-Way ANOVA test. which was implemented in cases involving more than two independent groups. The Pearson Correlation Test was utilized to examine the relationship between variables. while a regression test was employed to ascertain the effect. The statistical significance level was established at ($p < 0.05$) for all tests. Given the normal distribution of the data sets. frequency and mean values were utilized. Multiple comparisons between different variables were made using independent groups t-test. one-way variance analysis. and Tamhane test. Correlation for relationship and regression analysis for effect were also used. The necessary permissions for this research were passed by the ethics committee with the decision of the "Siirt University Scientific Research and Publication Ethics Committee" dated 12/11/2024 and numbered 2024-7946.

The study's findings based on an examination of the adolescent psychological resilience scale and its sub-dimensions in relation to gender, sports branch, mother's education status and father's education status. revealed a statistically significant difference between empathy and gender. Specifically the mean score of men in the empathy sub-dimension was found to be significantly higher than that of women. A statistically significant association was identified between family support and sports branch in the sub-dimensions of the psychological resilience scale. However no significant association was observed in the self-esteem scale. The mean score of individuals practicing judo in the family support sub-dimension was found to be significantly

lower than that of individuals engaged in gymnastics. A statistically significant relationship was identified between branch of sport and adaptation. The mean score of individuals engaging in gymnastics from the adaptation sub-dimension was found to be significantly lower than that of individuals participating in athletics. A similar study by Reddy and Berhanu (2016) found that individuals interested in football. volleyball. and basketball branches differed significantly according to their branches of sports. Another study by Solomon (2015) concluded that there was a significant difference between the branch of sports and psychological resilience.

Conclusion: The findings of the present study demonstrate that there are both negative and positive relationships between psychological resilience and self-esteem and that adolescent psychological resilience has a significant negative impact on self-esteem ($p<0.05$). The results of the study indicate that as psychological resilience increases so does an individual's confidence in their own resources and a parallel increase in self-esteem is observed. It is imperative for individuals enrolled in summer sports programs to acknowledge the interplay between psychological resilience and self-esteem. The existing body of research indicates a positive correlation between these two factor suggesting that an increase in one is often accompanied by an increase in the other. Consequently it is proposed that interventions aimed at enhancing self-esteem can concomitantly boost psychological resilience in individuals enrolled in sports schools. thereby facilitating the development of their self-esteem. It is imperative for the organization of summer sports schools to incorporate activities that foster the social and psychological development of individuals. The selection of sports branches should be made in accordance with the interests and abilities of individuals. It is imperative for families and trainers to be cognizant of the self-esteem levels of the individuals involved.

Keywords: Sports, Psychological Resilience, Self-Esteem

Öz: Bu araştırmada; Yaz spor okullarına katılan bireylerde benlik saygısı ve psikolojik dayanıklılık düzeyleri arasındaki ilişkinin incelenmesi amaçlanmıştır. Araştırma evrenini İstanbul ili Araştırmanın örneklem grubu ise; Bakırköy ilçesinde yaz spor okulların da Atletizm, Judo, Jimnastik ve Taekwondo sporu yapan gönüllü kadın (238) ve erkek (255) toplam 493 kişi oluşturmaktadır. Veriler elde edilirken bireylere sosyo-demografik bilgilerini belirlemek için kişisel bilgi formu kullanılırken psikolojik dayanıklılıklarının belirlenmesinde "Ergen Psikolojik Dayanıklılık Ölçeği", benlik saygısının belirlenmesi için "Rosenberg Benlik Saygısı Ölçeği"nden yararlanılmıştır. Toplanan veriler SPSS (Statistical Package for Social Sciences) 29.0 paket programı ile analiz edilmiştir. Bulgular: Veri setleri normal dağılım gösterdiği için Frekans ve ortalama değerlerinden faydalanılmıştır. Bağımsız olan gruplar t-testi farklı değişkenler arasında çoklu karşılaştırmalar için tek yönlü varyans analizi ile tamhane testi ve ilişki için korelasyon analizi etki için de rekreasyon analizinden yararlanılmıştır. Sonuç olarak yapılan analizler sonucu elde edilen bulgulara göre; bireylerin psikolojik dayanıklılık ve benlik saygısı arasında negatif ve pozitif yönlü ilişkilerin olduğu ve ergen psikolojik dayanıklığın benlik saygısını pozitif yönde ve anlamlı olarak etkilemekte olduğu saptanmıştır ($p<0.05$).

Anahtar Kelimeler: Spor, Psikolojik Dayanıklılık, Benlik Saygısı

Introductıon

Sports are organized, systematic and repetitive physical activities that individuals perform within the framework of rules in order to improve their physical capacity, compete, spend their free time, engage in social interaction or achieve psychological satisfaction (Bailey et al., 2013). In addition, sports, as a social institution, undertake important functions such as transferring values, cultural integration and identity construction in society (Coakley, 2017). Contemporary research has seen an uptick in studies examining the psychological impact of sports on children. While sports contribute to socialization. increased self-confidence. and improved communication skills by supporting personality development they also help to cope with problems such as timidity, anger and violence. Sports have a positive effect on physiological and psychological changes in youth (Karagün, 2016). The conceptualization of psychological resilience has evolved both chronologically and theoretically, shifting from a static personality trait to a dynamic, context-dependent process. The term "resilience" originates from the Latin resilire, meaning "to leap back" or "to rebound"

(Masten, 2001), and was initially understood as a stable trait—an inherent capacity to withstand adversity (Block & Block, 1980). However, more recent approaches define resilience as an adaptive and interactive process that unfolds over time, shaped by the individual's psychological resources and environmental context (Luthar, Cicchetti, & Becker, 2000; Masten, 2018).Psychological resilience includes both protective traits (e.g., self-efficacy, optimism, emotional regulation) and processes that help individuals to adapt positively despite significant stress or trauma (Southwick et al., 2014). Within the stress and coping framework (Lazarus & Folkman, 1984), resilience is viewed as the individual's capacity to mobilize effective coping strategies under pressure. Similarly, attachment theory emphasizes the role of early relational security in the development of resilience, suggesting that secure attachment promotes internal working models that buffer against psychological distress (Bowlby, 1988; Mikulincer & Shaver, 2007). In addition, positive psychology theories conceptualize resilience as a core human strength that contributes to well-being, highlighting constructs such as post-traumatic growth, hope, and meaning-making (Seligman, 2011).Thus, psychological resilience is not a fixed entity but a multidimensional phenomenon that involves biological, psychological, social, and cultural factors. It varies across age, gender, developmental stage, sociocultural context, and life experiences (Windle, 2011). As such, resilience encompasses both the capacity to endure stress and the ability to recover and grow from adversity. This complex interplay underscores the need for an integrative and dynamic understanding of resilience within contemporary psychological research.

The conceptualizations of psychological resilience and self-esteem have evolved over time from static traits to dynamic, context-dependent processes. Resilience, derived from the Latin resilire (to rebound), was initially viewed as a stable trait (Block & Block, 1980), but has since been redefined as a process shaped by internal resources and environmental influences (Masten, 2001; Luthar et al., 2000). It involves adaptive coping under stress (Lazarus & Folkman, 1984) and is supported by protective factors such as emotional regulation and self-efficacy (Southwick et al., 2014). Attachment theory (Bowlby, 1988) and positive psychology (Seligman, 2011) further explain resilience through early relational security and growth-oriented responses to adversity. Similarly, self-esteem—a core component of the self—has been reinterpreted as both a cognitive and emotional evaluation of one's worth (Rosenberg, 1965; Mruk, 2006). Rooted in humanistic psychology, it is linked to congruence between self-image and ideal self (Rogers, 1959) and appears in Maslow's hierarchy as a key developmental need (Maslow, 1943). Self-Determination Theory (Deci & Ryan, 2000) frames self-esteem as a product of fulfilling needs for competence, autonomy, and relatedness. Both constructs are influenced by personal experiences, sociocultural context, and interpersonal relationships, and are crucial for psychological well-being.

The relationship between psychological resilience and self-esteem has received increasing scholarly attention, particularly in the context of sports, health, and mental well-being. Both constructs are multidimensional and dynamically interact under the influence of internal and external factors such as stress, self-perception, coping strategies, and achievement contexts. Research suggests that individuals with higher self-esteem often exhibit greater psychological resilience, as self-worth can act as a buffer in the face of adversity (Dahiya & Gupta, 2021). Conversely, resilient individuals may develop stronger self-esteem by successfully navigating challenges and maintaining emotional balance (Farsole & Bajaj, 2023). In sport psychology literature, this interplay has been particularly emphasized. For instance, Sarkar and Fletcher (2014) highlight that resilient athletes are more likely to possess a stable and positive self-concept, which supports consistent performance under pressure. Similarly, Hu et al. (2025) found that physical self-esteem acts as a mediating mechanism between regular exercise and psychological resilience among college students, indicating a functional link between body-related self-perceptions and mental adaptability. These studies demonstrate that self-esteem and resilience not only correlate positively but also interact in meaningful ways through mediators such as motivation, self-efficacy, and environmental feedback.

Given these findings, understanding the reciprocal relationship between self-esteem and psychological resilience is essential for interpreting the psychological makeup of individuals, particularly in performance-oriented or high-stress environments. This integrated perspective forms the conceptual basis for the present study's research questions, which aim to explore the predictive and associative dynamics between these two psychological constructs.

The objective of this study is to examine the relationship between self-esteem and psychological resilience levels in individuals participating in summer sports schools. To this end the following research questions have been formulated:

- ✓ Is there a statistically significant relationship between self-esteem and psychological resilience levels among individuals participating in summer sports schools?
- ✓ Does self-esteem have a significant effect on psychological resilience?

Method

Research Group

This study employs a descriptive survey model, which aims to examine the relationship between psychological resilience and self-esteem among individuals participating in organized sports activities. The population of the research consists of individuals residing in Istanbul Province during the 2023–2024 academic year. The sample was drawn from participants enrolled in athletics, judo, gymnastics, and taekwondo programs at summer sports schools located in the Bakırköy district. Initially, a total of 502 volunteer participants 245 girls and 257 boys agreed to take part in the study. Following the administration of data collection tools, the scale forms were reviewed for completeness and accuracy. Forms that were left blank or completed incorrectly were excluded from the final analysis. As a result, 493 valid scale forms comprising 238 from female and 255 from male participants were included in the study.

This methodological approach allowed for the collection of quantitative data to assess the variables of interest in a naturalistic setting, aligning with the objectives of descriptive research in social sciences.

Research Ethics

The necessary permissions for this research were obtained from the ethics committee with the decision of "Siirt University Scientific Research and Publication Ethics Committee dated 12/11/2024 and numbered 2024-7946.

Data Collection Tools

Personal Information Form: In light of the extant literature. and as created by the researchers, an information form consisting of questions such as gender. sport branch, income level, education level of parents and education level of the individuals participating in sports schools was used.

Rosenberg Self-Esteem Scale:

The scale, which was developed by Morris Rosenberg (1965) and consists of 63 items, has 12 subscales. The scale is a 4-point Likert-type scale consisting of 10 items, five of which are reverse coded. Rosenberg has stipulated that the subscales can be utilized independently in research, should such a course of action be deemed appropriate. For the purpose of the study the "self-esteem" subscale of the scale was used to measure self-esteem. According to the scale's evaluation system, subjects can attain scores ranging from 0 to 6 points. An increase in the score obtained from the scale indicates a decrease in the

level of self-esteem. Scores ranging from 0 to 1 point are indicative of a high level of self-esteem while scores between 2 and 4 points fall within the range of moderate self-esteem. Moderate self-esteem and 5-6 points: Low level of self-esteem. The reliability coefficient of the scale adapted into Turkish by Çuhadaroğlu (1986) was 0.75. and the validity coefficient was 0.71 (Balat & Akman. 2004).

Adolescent Psychological Resilience Scale:

The Psychological Resilience Scale developed by Bulut. Doğan. and Altundağ (2012) and comprising 29 items. was utilized to assess psychological resilience in the present study. The scale comprises five sub-dimensions: family support, school support, peer support, adaptation, empathy and determination to struggle. The family support sub-dimension is measured with seven items the peer support sub-dimension with five items, the school support sub-dimension with five items the adaptation dimension with four items the perseverance to struggle dimension with five items. and the empathy dimension with three items. The reliability coefficient for the entire scale is 0.87. Scores within the scale range from 29 to 116. The scale utilizes a 4-point Likert scale ranging from 1 (not at all suitable) to 4 (very suitable). It is noteworthy that certain questions within the scale are reverse coded. Higher scores on the scale are indicative of higher psychological resilience (Bulut, Doğan,. & Altundağ, 2013).

Data Analysis

The data obtained from the research were transferred to the computer environment and edited using the Microsoft Excel program. Then the data were analyzed with SPSS (Statistical Package for the Social Sciences) 29.0. Prior to the initiation of the analysis the suitability of the numerical data for normal distribution was examined using Skewness and Kurtosis tests, Histogram and Q-Q Plot graphs. The analysis yielded the conclusion that the data originated from a normal distribution. While categorical data are typically presented with frequency and percentage values numerical data are shown with mean and standard deviation values as they satisfy the normality assumption. The statistical analysis employed included the Independent Sample t-test for two independent group comparisons and the One-Way ANOVA for cases involving more than two independent groups. The Pearson Correlation Test was employed to assess the relationship between two numerical variables. It is imperative to note that the statistical significance level was set at $p < 0.05$ for all tests ensuring the reliability and validity of the findings.

Results

Confirmatory factor analysis (CFA) was conducted to test the factor structure of the Adolescent Psychological Resilience Scale. The Adolescent Psychological Resilience Scale consists of 6 sub-dimensions and 21 items. The model fit indices obtained as a result of the analysis show that the model provides an acceptable level of fit with the data.

As a result of CFA, the basic fit indicators of the model were calculated as CMIN/DF=2,256, RMSEA=0,051, CFI=0,911, GFI=0,898, IFI=0,912. In the CFA results, the ratio of the model's chi-square fit index to the degrees of freedom (CMIN/DF) was found to be 2.256; this value shows that the model shows an adequate fit in terms of structural validity according to the values recommended by Kline (2015) (below 5 indicates acceptable fit). CFI and IFI values above 0.90 indicate that the model shows a good fit, and RMSEA values below or close to 0.08 indicate an acceptable fit. In addition, GFI and NFI values between 0.85 and 0.90 indicate that the model offers an acceptable fit in general (Kline, 2015; Schermelleh-Engel et al., 2003).

In line with these findings, it was concluded that the sub-dimensions of the scale were consistent with the theoretical structure and that it was a valid measurement tool.

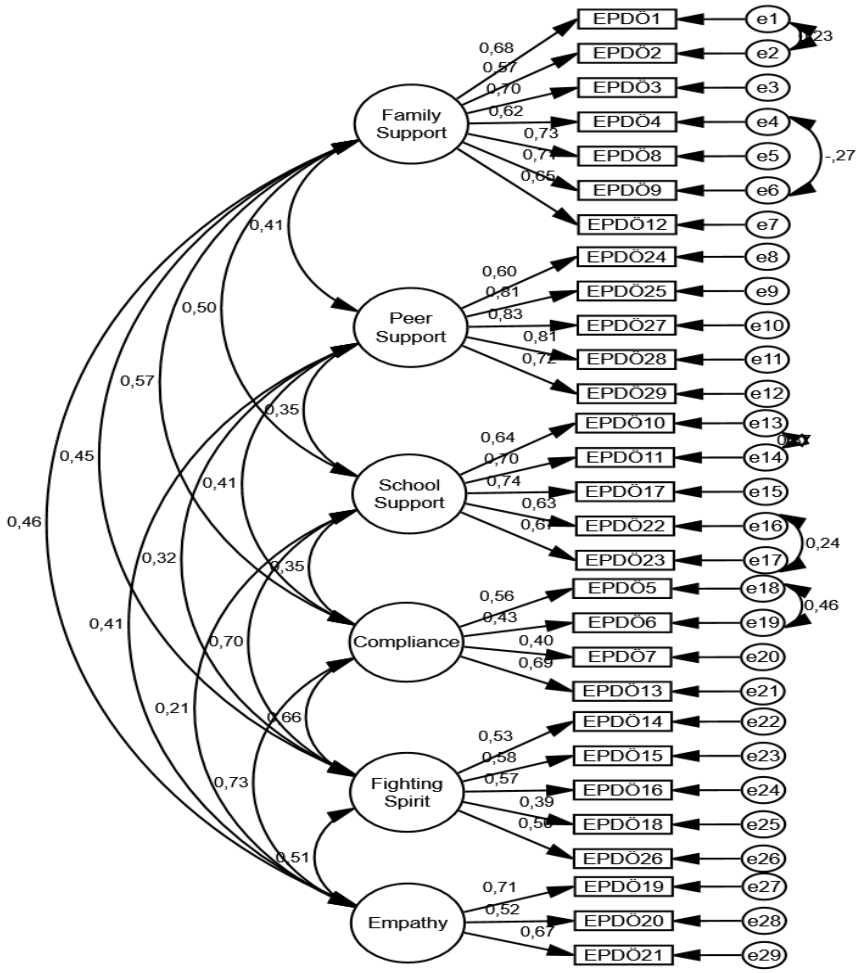

CMIN=805,477; DF=357; CMIN/DF=2,256; RMSEA=,051; CFI=,911; GFI=,898

Figure 1: Confirmatory factor analysis of Adolescent Psychological Resilience

Confirmatory factor analysis (CFA) was conducted to test the factor structure of the Rosenberg Self-Esteem Scale. Rosenberg Self-Esteem Scale consists of one dimension and 10 items. The model fit indices obtained as a result of the analysis show that the model provides an acceptable level of fit with the data.

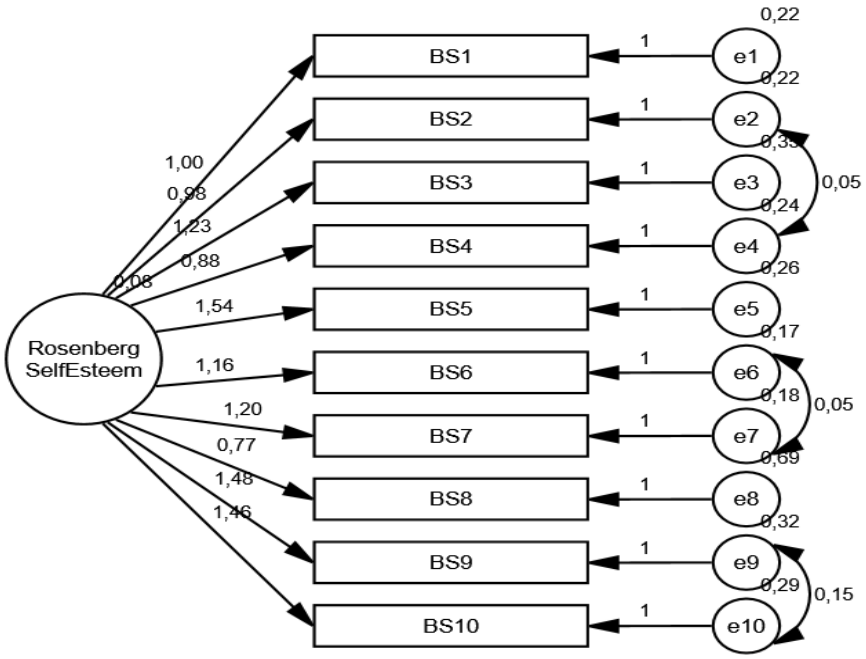

CMIN=139,194; DF=32; CMIN/DF=4,350; RMSEA=,083; CFI=,922; GFI=,940

Figure 2: Rosenberg Self-Esteem Scale Confirmatory Factor Analysis

As a result of CFA, the basic fit indicators of the model were calculated as CMIN/DF=4.350, RMSEA=0.083, CFI=0.922, GFI=0.940, IFI=0.946. In the CFA results, the ratio of the model's chi-square fit index to the degrees of freedom (CMIN/DF) was found to be 4.350; this value shows that the model shows an adequate fit in terms of structural validity according to the values recommended by Kline (2015) (below 5 indicates acceptable fit). CFI and IFI values above 0.90 indicate that the model shows a good fit, and RMSEA values below or close to 0.08 indicate an acceptable fit. In addition, GFI and NFI values between 0.85 and 0.90 indicate that the model offers an acceptable fit in general (Kline, 2015; Schermelleh-Engel et al., 2003).
In line with these findings, it was concluded that the sub-dimensions of the scale were consistent with the theoretical structure and that it was a valid measurement tool.

Table 1. Statistics of the Scales Included in the Study

	$\bar{x}$±SD	Lower-upper value	CA (α)	Skewness	Kurtosis
Family Support	25.35±2.60	15-28	0.843	-0.879	0.0999
Peer Support	16.66±2.65	5-20	0.864	-0.619	0.724
School Support	16.51±2.69	5-20	0.824	-0.456	0.332
Harmony	11.25±1.5	7-16	0.792	0.106	0.354
Determination to Struggle	14.89±1.83	8-20	0.717	-0.348	0.527
Empathy	9.49±1.51	3-12	0.665	-0.148	0.308
Adolescent Psychological Resilience Scale	94.15±8.17	66-114	**0.847**	**-0.064**	**-0.438**
Rosenberg Self-Esteem Scale	17.49±3.88	10-35	**0.804**	**0.037**	**0.118**

$\bar{x}$±SD=mean± standard deviation. CA (α)=Cronbach's Alpha

As illustrated in Table 1. the statistical analysis of the adolescent psychological resilience scale and the Rosenberg self-esteem scale reveals notable findings. The mean and standard deviation values of the adolescent psychological resilience scale were 94.15 ± 8.17. with a range of 66-114. Similarly. the mean and standard deviation values of the Rosenberg self-esteem scale were 17.49 ± 3.88. with a range of 10-35. The Cronbach Alpha coefficient is classified as unreliable when 0.00 <α <0.40. as low reliability when 0.40 <α <0.60. as highly reliable when 0.60 <α <0.80. and as highly reliable when 0.80 <α <1.00 (Tavakol & Dennick. 2011). An examination of the table reveals that the adolescent psychological resilience scale and its sub-dimensions as well as the Rosenberg self-esteem scale. exhibit high reliability. Tabainhick and Fidell (2013) established that data is normally distributed when skewness and kurtosis values fall between -1.5 and +1.5. The subsequent examination of skewness and kurtosis values revealed that the adolescent psychological resilience scale and its sub-dimensions. as well as the Rosenberg self-esteem scale. satisfied the assumption of a normal distribution.

Table 2. Descriptive Statistics on Socio-Demographic Characteristics of Participants

	n	%
Gender		
Female	238	%48.3
Male	255	%51.7
Sport Branch		
Athletics	127	%25.8
Gymnastics	221	%44.8
Judo	71	%14.4
Taekwondo	74	%15.0
Mother's Education		
Primary school and below	118	%23.9
Secondary school	227	%46.0
University and above	148	%30.0
Father's Education		
Primary school and below	89	%18.1
Secondary school	243	%49.3
University and above	161	%32.7
Family Monthly Income		
Not good	22	%4.5
Average	313	%63.5
Good	150	%30.4
Very good	8	%1.6

Table 2 presents descriptive statistics on the socio-demographic characteristics of the participants. The data indicates that 51.7% of the participants identified as male. while 48.3% identified as female. According to the sports branch. 44.8% of the participants expressed interest in

gymnastics. 25.8% in athletics. 15.0% in taekwondo. and 14.4% in judo. Furthermore. 46% of the participants had parents who had graduated from secondary education. while 49.3% of the participants had parents who had graduated from secondary education. Finally. 63.5% of the participants indicated that their household income was medium.

Table 3. The Analysis of the Difference Between Adolescent Psychological Resilience Scale and Its Subscales and Gender. Sport Branch. Mother's Education Level and Father's Education Level

		Family Support		Peer Support		School Support		Harmony		Determination to Struggle		Empathy		Adolescent Psychological Resilience Scale	
	n	$\bar{x}$	SD	$\bar{x}$	SD	$\bar{x}$	SD	$\bar{x}$	SD	$\bar{x}$	SD	$\bar{x}$	SD	$\bar{x}$	SD
Gender															
Girls	238	25.17	2.57	16.59	2.71	16.33	2.39	11.24	1.57	14.87	1.66	9.32	1.51	93.51	8.18
Boy	255	25.52	2.62	16.73	2.59	16.67	2.94	11.25	1.49	14.92	1.97	9.65	1.49	94.75	8.14
t		1.494		0.608		1.416		0.024		0.340		2.511		1.682	
p		0.136		0.544		0.157		0.981		0.734		**0.012**		0.093	
Sports Branches															
Athletics	127	25.48^{ab}	2.24	17.01	2.48	16.13	2.77	11.55^{a}	1.50	14.77	1.83	9.64	1.57	94.58	7.42
Gymnastics	221	25.65^{a}	2.47	16.66	2.38	16.87	2.64	11.05^{b}	1.53	14.91	1.83	9.31	1.47	94.45	8.23
Judo	71	24.49^{b}	3.06	16.42	3.18	16.32	2.95	11.01^{ab}	1.43	15.01	1.78	9.48	1.52	92.75	9.12
Taekwondo	74	25.04^{ab}	2.90	16.31	3.07	16.26	2.32	11.53^{ab}	1.56	14.93	1.88	9.80	1.45	93.86	8.27
F		4.097		1.354		2.497		4.369 (T)		0.311		2.527		0.947	
p		**0.007**		0.256		0.059		**0.005**		0.818		0.057		0.417	
Mother's Education Status															
Primary education and below	118	24.95	2.50	17.05	2.79	15.86^{a}	2.84	11.41	1.53	14.71	1.82	9.42	1.52	93.40	7.64
Secondary Education	227	25.40	2.64	16.43	2.65	16.53^{ab}	2.63	11.14	1.58	14.82	1.84	9.50	1.60	93.81	8.54
University and above	148	25.59	2.59	16.72	2.50	16.99^{b}	2.56	11.28	1.44	15.16	1.79	9.54	1.37	95.28	7.94
F		2.104		2.208		5.919		1.281		2.305		0.230		2.134	
p		0.123		0.111		**0.003**		0.279		0.101		0.795		0.119	
Father's Education Status															
Primary education and below	89	25.11	2.69	16.80	2.96	15.98^{a}	2.97	11.36	1.63	14.69	1.90	9.54	1.58	93.47	8.38
Secondary Education	243	25.25	2.57	16.59	2.64	16.40^{ab}	2.60	11.18	1.48	14.79	1.78	9.46	1.55	93.67	8.02
University and above	161	25.63	2.58	16.70	2.48	16.97^{b}	2.59	11.28	1.54	15.17	1.83	9.51	1.41	95.25	8.23
F		1.467		0.228		4.360		0.503		2.803		0.105		2.206	
p		0.232		0.796		**0.013**		0.605		0.062		0.900		0.111	

$\bar{x}$= Mean. SD=Standard Deviation. t= Independent-Samples t Test. F= One-Way ANOVA Test. $p<0.05$

$^{a.b}$ letters represent the Posthoc result. Differences between different letters are significant.

Table 3 presents the findings of the analysis. which examined the disparities between the adolescent psychological resilience scale and its sub-dimensions. as well as factors such as gender. sport branch. mother's education level. and father's education level. A statistically significant

difference was identified between empathy and gender ($p < 0.05$). The mean score for girls was 9.32 (SD=1.51). while the mean score for boys was 9.65 (SD=1.49). The mean score of boys in the empathy sub-dimension was significantly higher than that of girls.

A statistically significant relationship was identified between the sport branch and family support ($p<0.05$). The mean score of individuals practicing athletics was 25.48 (SD=2.24). the mean score of individuals practicing gymnastics was 25.65 (SD=2.47). the mean score of individuals practicing judo was 24.49 (SD=3.06). and the mean score of individuals practicing taekwondo was 25.04 (SD=2.90). The Scheffe test revealed a statistically significant difference in mean scores between individuals practicing judo and individuals practicing gymnastics in the family support sub-dimension ($p<0.05$).

A statistically significant difference was observed between the sport branch and adjustment ($p < 0.05$). The mean score of individuals practicing athletics was 14.77 (SD=1.83). the mean score of individuals practicing gymnastics was 11.05 (SD=1.53). the mean score of individuals practicing judo was 1.43 (SD=11.01). and the mean score of individuals practicing taekwondo was 11.53 (SD=1.56). The Scheffe test revealed a statistically significant difference in mean scores between individuals practicing gymnastics and individuals practicing athletics. with the former exhibiting a lower mean score in the adaptation sub-dimension.

A statistically significant relationship was identified between maternal education level and school support ($p < 0.05$). The mean score of mothers with a primary education or below was 15.86 (SD=2.84). the mean score of mothers with a secondary education was 16.53 (SD=2.63). and the mean score of mothers with a university education or above was 16.99 (SD=2.56). The Tamhane test revealed a statistically significant difference in mean scores between mothers who had graduated from primary education and below in the school support sub-dimension and those who had graduated from university and above.

A statistically significant difference was identified between fathers' education levels and school support ($p < 0.05$). The mean score of fathers with a primary education was 15.98 (SD=2.97). the mean score of fathers with a secondary education was 16.40 (SD=2.60) and the mean score of fathers with a university education or higher was 16.97 (SD=2.59). The Tamhane test was employed to assess the statistical significance of this discrepancy revealing that fathers who had completed primary education but had not pursued further education exhibited a significantly lower mean score on the school support sub-dimension compared to those who had attained a university degree or higher ($p<0.05$).

Table 4. Analysis of the Difference Between Rosenberg Self-Esteem Scale and Gender. Sport Branch. Mother's Education Level and Father's Education Level

	Rosenberg Self-Esteem Scale					
	n	$\bar{x}$	SD	t/F*	p	Difference
Gender						
Girls	238	17.80	3.86	1.704	0.089	
Boys	255	17.21	3.88			
Sports Branches						
Athletics	127	18.03	4.16	2.343	0.072	
Gymnastics	221	17.03	3.66			
Judo	71	17.45	3.70			
Taekwondo	74	18.01	4.08			
Mother's Education Status						
(1) Primary education and below	118	18.03	3.74	5.934	**0.003**	**3<1**
(2) Secondary education	227	17.81	4.05			**3<2**
(3) University and above	148	16.59	3.58			

Father's Education Status					
Primary education and below	89	17.73	4.17	1.329	0.266
Secondary Education	243	17.68	3.72		
University and above	161	17.09	3.94		

$\bar{x}$= Mean. SS=Standard Deviation. t= Independent-Sample t Test. F= One-Way ANOVA Test. p<0.05*

Upon examination of Table 4. a statistically significant relationship was identified between the maternal educational attainment and the Rosenberg self-esteem scale ($p < 0.05$). The mean score of mothers who had received only primary education or below was 18.03 (SD=3.74). the mean score of mothers who had received secondary education was 17.81 (SD=4.05). and the mean score of mothers who had received university education or above was 16.59 (SD=3.58). The Tamhane test revealed that the mean score of mothers with university graduates on the self-esteem scale was significantly lower than the mean score of mothers with primary education and below and secondary education graduates. Retrospective ethics committee permission is not required for articles produced from master's/doctoral studies in which research data were used before 2020. However. the date of data collection should be specified in the abstract and method section.

Table 5. Analysis of the Relationship Between Age Adolescent Psychological Resilience Scale Subscales and Rosenberg Self-Esteem Scale

		1	2	3	4	5	6	7	8	9
1- Age	*rh*	1								
	p									
2- Family Support	*rh*	-.105	1							
	p	**.019**								
3- Peer Support	*rh*	-.019	.358	1						
	p	.669	**<.001**							
4- School Support	*rh*	-.113	.410	.329	1					
	p	**.012**	**<.001**	**<.001**						
5- Harmony	*rh*	.121	.206	.201	.006	1				
	p	**.007**	**<.001**	**<.001**	.901					
6- Determination to Struggle	*rh*	-.023	.265	.251	.400	.102	1			
	p	.608	**<.001**	**<.001**	**<.001**	**.024**				
7- Empathy	*rh*	.072	.354	.318	.163	.304	.317	1		
	p	.111	**<.001**	**<.001**	**<.001**	**<.001**	**<.001**			
8- Adolescent Psychological Resilience Scale	*rh*	-.046	.732	.698	.686	.398	.598	.582	1	
	p	.305	**<.001**	**<.001**	**<.001**	**<.001**	**<.001**	**<.001**		
9- Rosenberg Self-Esteem Scale	*rh*	.140	-.463	-.326	-.424	-.141	-.358	-.234	-.541	1
	p	**.002**	**<.001**	**<.001**	**<.001**	**.002**	**<.001**	**<.001**	**<.001**	

Pearson Correlation Test. p<0.05

Table 5 presents the findings of the analysis of the relationship between the Adolescent Resilience Scale and its sub-dimensions and the Rosenberg Self-Esteem Scale. The findings indicate a very weak negative relationship between age and family support ($r = -0.105$. $p = 0.019$) and school support ($r = -0.113$. $p = 0.012$). Additionally. there is a very weak positive relationship between adjustment ($r = 0.121$. $p = 0.002$) and self-esteem ($r = 0.140$. $p = 0.002$). As age increased. family support and school support decreased. while adjustment and self-esteem increased.

A moderate correlation was identified between the Rosenberg self-esteem scale and family support ($rh = -0.463$. $p<0.001$). school support ($rh=-0.424$. $p<0.001$). and adolescent psychological resilience scale ($rh=-0.541$. $p<0.001$). Additionally. a negative relationship was observed between peer support. The correlation between Rosenberg self-esteem scale and family support was found to

be moderate (rh =-0.463. p <0.001). as was the correlation between the Rosenberg self-esteem scale and school support (rh = 0.424. p <0.001). Furthermore. a weak negative relationship was identified between the Rosenberg self-esteem scale and adolescent psychological resilience scale (rh=-0.541. p <0.001). as well as between the Rosenberg self-esteem scale and determination to struggle (rh=-0.358. p <0.001) and empathy (rh =-0.234. p <0.001). Finally. a very weak negative relationship was found between adaptation (r =-0.141. p = 0.002). As self-esteem levels rise. there is a concomitant decline in family support. school support. adolescent resilience. peer support. determination to struggle. empathy. and adjustment.

Tablo 6. Effect Analysis of Adolescent Psychological Resilience Scale on Self-Esteem

	$\hat{\beta}$	SE $\hat{\beta}$	Beta	t	p
(Constant)	41.698	1.702		24.493	**<.001**
Adolescent Psychological Resilience Scale	-.257	.018	-.541	-14.270	**<.001**
	R	**R^2**	**F**	**p**	
	0.541	0.293	203.637	<.001	

Dependent Variable: Rosenberg Self-Esteem Scale

Table 6 presents the findings of the simple linear regression analysis. which examines the relationship between the Adolescent Resilience Scale and self-esteem. The findings indicate a negative and significant relationship between the adolescent psychological resilience scale and self-esteem. with a statistical significance of (-0.257; F=203.637; p<0.001). As the score on the adolescent psychological resilience scale increases. the score on the self-esteem scale decreases. The regression model. which was used to predict self-esteem scores. was found to be 29% explanatory of the variability in self-esteem scores (R2=0.293).

Table 7. Multiple Regression Analysis Results

	$\hat{\beta}$	SE $\hat{\beta}$	Beta	t	p
(Constant)	42.372	1.830		23.158	**<.001**
Family Support	-.431	.066	-.289	-6.515	**<.001**
Peer Support	-.153	.062	-.105	-2.470	.014
School Support	-.293	.064	-.203	-4.555	**<.001**
Harmony	-.107	.101	-.042	-1.059	.290
Determination to Struggle	-.360	.091	-.169	-3.979	**<.001**
Empathy	.003	.111	.001	.025	.980
	R^2	**Adj. R^2**	**F**	**p**	
	0.320	0.312	38.146	<.001	

Dependent Variable: Rosenberg Self-Esteem Scale

When Table 7 is examined. the effect of the variables included in the model on the Rosenberg self-esteem scale is significant (F=38.146; p<0.001) and family support. peer support. school support. adaptation. determination to struggle and empathy explain 32% of the self-esteem scale (Adj. R2=0.320). When the variables are analyzed individually. family support (β=-0.431. t=-6.515.

p<0.001). peer support (β=-0.153. t=-2.470. p<0.05). school support (β=-0.293. t=-4.555. p<0.001) and determination to struggle (β=-0.360. t=-3.979. p<0.001) have a significant and negative effect.

Dıscussıon

This research was conducted on individuals participating in different sports branches in summer sports schools with the objective of examining the relationship between self-esteem and psychological resilience levels in individuals participating in summer sports schools. The study sample included 238 female and 255 male participants. Of these 127 were interested in athletics 221 in gymnastics. 71 in judo.and 74 in taekwondo.

The study's findings which were based on a statistical analysis of the adolescent psychological resilience scale and its sub-dimensions as well as on the participants' gender sport branch mother's education level and father's education level revealed a statistically significant relationship between empathy and gender. The mean empathy score among males significantly exceeded that of females. The extant literature on the subject is inconclusive with studies supporting both the existence of a gender gap in empathy and its absence. The findings indicate that there is no statistically significant difference between gender, psychological resilience and self-esteem averages. Studies that align with our findings indicate an absence of gender disparity (Connor & Davidson, 2003; Terzi, 2008; Adıgüzel et al.. 2022; Çeliker, 2018; Özkara & Özbay, 2019; Demir & Duman, 2019; Çiftçi, 2018). In contrast another study indicated that female athletes exhibited significantly higher psychological resilience compared to their male counterparts (Saka & Ceylan 2018; Çutuk et al., 2017; Chan, 2003). There are findings that are parallel to our study in a different study. The self-esteem of students studying in different academic departments was examined and it was concluded that self-esteem changed according to department differences (Özçelik Herdem, 2018). In the study conducted by Eriş and İkiz (2013), it was determined that gender did not have an effect on the self-esteem and social anxiety levels of adolescents. Although recent years have witnessed a growing body of research on psychological resilience and self-esteem, these studies have not been adequately integrated into the present discussion. A more in-depth review of the literature reveals several important contributions addressing these constructs both independently and in relation to one another. For instance, Kim, Kim, and Park (2023) emphasized the significant influence of regular physical activity and self-efficacy on psychological resilience, especially in athletic contexts. Likewise, Edwards, Edwards, and Basson (2004) found that physical self-esteem plays a critical role in promoting psychological well-being through sport and exercise engagement. In a more recent study, Lin et al. (2024) demonstrated that both self-esteem and psychological resilience act as mediators between physical activity and interpersonal adaptation in adolescents, particularly in the post-pandemic context. These studies support the present study’s findings by highlighting the interconnectedness of self-esteem and resilience, particularly through mediating constructs such as motivation, self-efficacy, and physical engagement. Integrating these perspectives not only strengthens the empirical foundation of the discussion but also situates the current findings within a broader psychological framework.

The findings of our study indicated a statistically significant relationship between family support and sports branch in the sub-dimensions of the psychological resilience scale. However no significant relationship was observed in the self-esteem scale. The judo practitioners exhibited a mean score that was significantly lower than their gymnastics counterparts. A significant disparity was identified between the sport branch and the adjustment sub-dimension. The mean score of individuals practicing gymnastics on the adjustment sub-dimension was found to be significantly lower than the mean score of individuals practicing athletics. A similar pattern was observed in studies examining the sports branches of individuals interested in football, volleyball and basketball

(Reddy & Berhanu, 2016). A separate study determined a significant relationship between sports branch and psychological resilience (Solomon, 2015).
In the context of school support a statistically significant association was identified between the educational attainment of the mother and father and school support among the children. This discrepancy can be attributed to the limited educational resources available to families with lower levels of education which hinders their ability to provide adequate support for their children's educational development. Parents with limited educational attainment tend to prioritize the cultivation of their children's relational skills within the context of Turkish society where relationality is a significant social value. This observation underscores the notion that family structures and values are profoundly influenced by social interactions. Parents with limited education tend to raise their children with a more collective understanding influenced by social norms and traditions. The extant literature contains analogous study results (Bindal, 2018) as well as studies that contradict our findings (Kımtel, 2020). The Rosenberg self-esteem findings revealed a significant disparity based on maternal educational attainment with mothers who had obtained a university degree or higher demonstrating a notably lower level of self-esteem compared to those with a primary or secondary education. In another study it was observed that adolescents with low self-esteem had a high tendency to engage in deviant and criminal behavior (Sankır, 2014). Another study mentioned the effect of social support on self-esteem and psychological resilience. The contributions of social support to the psychological health of the individual especially in the context of sibling relationships were discussed (Karslı, 2023).

The analysis of the relationship between the adolescent psychological resilience scale and its sub-dimensions and the Rosenberg self-esteem scale revealed a very weak negative relationship between age and family support and school and a very weak positive relationship between adjustment and self-esteem. As age increases family support and school support decrease while adjustment and self-esteem increase. A moderate relationship was identified between the Rosenberg self-esteem scale and family support. school support and adolescent psychological resilience scale. Additionally a weak negative relationship was observed between peer support determination to struggle and empathy and a very weak negative relationship between adjustment. Conversely an increase in self-esteem has been observed to result in a decline in family support, school support, adolescent psychological resilience, peer support, determination to struggle, empathy and adjustment. Conversely an increase in the score on the adolescent psychological resilience scale is associated with a decrease in the score on the self-esteem scale. A review of the extant literature reveals a robust correlation between psychological resilience and self-esteem in young people as evidenced by studies conducted by Söğütlü et al. (2021) and Soylu (2018). In a different study the effects of psychological resilience programs on post-traumatic stress and resilience levels were examined and it was determined that the implemented program had a positive effect on the participants (Arıcı Özcan, 2020).

Conclusion

The study’s findings reveal a positive relationship between psychological resilience and self-esteem, showing that as psychological resilience strengthens, self-esteem tends to increase as well. This phenomenon can be attributed to the heightened confidence in one's own resources that accompanies an increase in psychological resilience. This finding underscores the significance of contemplating the interplay between psychological resilience and self-esteem in individuals enrolled in summer sports programs. The findings of the study demonstrate a positive correlation between these two factors suggesting that an increase in one is accompanied by an increase in the other. Consequently, it is recommended that studies aimed at enhancing self-esteem should also prioritize the augmentation of psychological resilience in individuals enrolled in sports schools, thereby contributing to the enhancement of self-esteem.

REFENCES

Adıgüzel, S., Karataş, B., Soylu, Y., Taş. M., & Serin, E. (2022). Bireysel ve Takım Sporcularının Psikolojik Dayanıklılık Düzeylerinin. Journal of International Social Research. 15(92).

Arıcı Özcan, N. (2020). *Psikolojik Dayanıklılık Programının (PDP) 15 Temmuz darbe girişiminde eşi gazi olan kadınların travma sonrası stres ve dayanıklılık düzeylerine etkisi*. Turkish Studies - Social Sciences. 15(3). 919–936.

B Solomon, G. (2015). Mental toughness among college athletes. Journal of Applied Sports Science. 5(3). 171-175.

Bailey, R., Hillman, C., Arent, S., & Petitpas, A. (2013). Physical activity: An underestimated investment in human capital? Journal of Physical Activity and Health, 10(3), 289–308. https://doi.org/10.1123/jpah.10.3.289

Balat, G,. U. & Akman,. B. (2004). Farklı Sosyo-Ekonomik Düzeydeki Lise Öğrencilerinin Benlik Saygısı Düzeylerinin İncelenmesi. Fırat Üniversitesi Sosyal Bilimler Dergisi. 14.2. 175-183.

Bindal, G. (2018). Ergenlerin psikolojik sağlamlığın (resilience). çocukluk çağındaki travma ve bağlanma stilleri ile ilişkisinin incelenmesi (Master's thesis. Hasan Kalyoncu Üniversitesi).

Block, J. H., & Block, J. (1980). The role of ego-control and ego-resiliency in the organization of behavior. In W. A. Collins (Ed.), Development of cognition, affect, and social relations: The Minnesota symposia on child psychology (Vol. 13, pp. 39–101). Erlbaum.

Bowlby, J. (1988). A secure base: Clinical applications of attachment theory. Routledge.

Bulut, S,. Doğan, U,. & Altundağ,. Y. (2013). Adolescent Psychological Resilience Scale: Validity and reliability study. Suvremena psihologija. 16(1). 21-32.

Chan, D. W. (2003). Hardiness and its role in the stress–burnout relationship among prospective Chinese teachers in Hong Kong. Teaching and teacher Education. 19(4). 381-395.

Coakley, J. (2017). The sociology of sport as a career and academic discipline. In Reflections on Sociology of Sport: Ten Questions, Ten Scholars, Ten Perspectives (pp. 33-48). Emerald Publishing Limited.

Connor, K,. M. & Davidson,. J. R. (2003). Development of a new resilience scale: The Connor-Davidson resilience scale (CD-RISC). Depression and anxiety. 18(2). 76- 82.

Çelik, O. B. (2018). Elit sporcuların ve sedanter bireylerin psikolojik dayanıklılık profilleri (Doctoral dissertation. Doktora Tezi. Gazi Üniversitesi Eğitim Bilimleri Enstitüsü. Ankara).

Çiftçi, H. (2018). Ergenlerin Benlik Saygısı Düzeylerinin Karşılaştırılması Meslek Yüksekokulu ve Meslek Lisesi Öğrencileri Üzerine Bir İnceleme. Elektronik Sosyal Bilimler Dergisi. 17(68). 1648-1665.

Çuhadaroğlu, F. (1986). Adölesanlarda Benlik Saygısı. Ankara: Hacettepe Üniversitesi. Tıp Fak. Psikiyatri Anabilim Dalı.

Çutuk, S., Beyleroğlu. M., Hazar, M., Çutuk. Z. A., & Bezci, Ş. (2017). Judo Sporcularının Psikolojik Dayanıklılık Düzeyleri İle Kaygı Düzeyleri Arasındaki İlişkinin İncelenmesi. Beden Eğitimi ve Spor Bilimleri Dergisi. 11(1). 109-117.

Dahiya, U., & Gupta, L. (2021). Role of resilience and self-esteem in determining sports performance. The International Journal of Indian Psychology, 9(4), 1647–1654. https://doi.org/10.25215/0904.191

Dearden, J. (2004). Resilience: A study of risk and protective factors fromthe perspective of youth people with experience of local authority care. Support For Learning. 19(4). 187-193.

Deci, E. L., & Ryan, R. M. (2000). The "what" and "why" of goal pursuits: Human needs and the self-determination of behavior. *Psychological Inquiry, 11*(4), 227–268.

Demir, K., & Duman, S. (2019). Bireylerin spor yapma durumlarıyla benlik saygıları ve mutluluk düzeyleri arasındaki ilişkisinin incelenmesi. Gaziantep Üniversitesi Spor Bilimleri Dergisi. 4(4). 437-449.

Earvolino-Ramirez, M. (2007. April). Resilience: A concept analysis. In Nursing forum (Vol. 42. No. 2. pp. 73-82). Malden. USA: Blackwell Publishing Inc.

Edwards, D. J., Edwards, S. D., & Basson, C. J. (2004). Psychological well-being and physical self-esteem in sport and exercise. International Journal of Mental Health Promotion, 6(1), 25–32. https://doi.org/10.1080/14623730.2004.9721939

Eriş, Y., & İkiz, F. E. (2013). *Ergenlerin benlik saygısı ve sosyal kaygı düzeyleri arasındaki ilişki ve kişisel değişkenlerin etkileri*. Journal of Turkish Studies. 8(6). 179–193.

Farsole, A., & Bajaj, A. (2023). Relationship between resilience and self-esteem among athletes. International Journal of Physical Education, Sports and Health, 10(2), 55–58.

Fletcher, D., & Sarkar, M. (2012). A grounded theory of psychological resilience in olympic champions. Psychology of Sport and Exercise. 13. 669–678.

Gizir, C. A. (2007). Psikolojik sağlamlık. risk faktörleri ve koruyucu faktörler üzerine bir derleme çalışması. Türk Psikolojik Danışma ve Rehberlik Dergisi. 3(26). 129-138.

Hu, L. T., & Bentler, P. M. (1999). Cutoff criteria for fit indexes in covariance structure analysis: Conventional criteria versus new alternatives. Structural Equation Modeling, 6(1), 1-55.

Hu, W., Xie, Y., Peng, C., Wang, B., & Zhuang, B. (2025). Mechanistic insights regarding the influence of physical exercise on psychological resilience via physical self-esteem in Chinese college students. International Journal of Sport and Exercise Psychology, 1–18. https://doi.org/10.1080/1612197X.2025.1001234

Karagün, E. (2016). Gençlik Dönemi Ruh Sağlığı Açısından Beden Eğitimi ve Spor Dersi. İnter - Disipliner Yaklaşımla gençliğin Umudu Toplumun Beklentileri (pp.1-707). Ankara: Hacettepe Taç Kitapçılık.

Karslı, F. (2023). Kardeş Sosyal Desteği ve Bireyler Üzerindeki Rolü Üzerine Bir İnceleme. *Electronic Turkish Studies*. *18*(4).

Kımter, N. (2020). Covid-19 günlerinde bireylerin psikolojik sağlamlık düzeylerinin bazı değişkenler açısından incelenmesi. IBAD Sosyal Bilimler Dergisi. 574-605.

Kim, D. H., Kim, J. H., & Park, K. J. (2023). The impact of regular exercise, competition experience, and physical self-efficacy on psychological resilience. Revista de Psicología del Deporte (Journal of Sport Psychology), 32(3), 1–19.

Kline, R. B. (2015). Principles and Practice of Structural Equation Modeling (4th ed.). Guilford Press.

Lazarus, R. S., & Folkman, S. (1984). Stress, appraisal, and coping. Springer.

Lin, H., Wang, B., Hu, Y., Song, X., & Zhang, D. (2024). Physical activity and interpersonal adaptation in Chinese adolescents after COVID-19: The mediating roles of self-esteem and

psychological resilience. Psychological Reports, 127(3), 1156–1174. https://doi.org/10.1177/00332941231179252

Luthar, S. S., Cicchetti, D., & Becker, B. (2000). The construct of resilience: A critical evaluation and guidelines for future work. Child Development, 71(3), 543–562. https://doi.org/10.1111/1467-8624.00164

Maslow, A. H. (1943). A theory of human motivation. *Psychological Review, 50*(4), 370–396.

Masten, A. S. (2001). Ordinary magic: Resilience processes in development. American Psychologist, 56(3), 227–238. https://doi.org/10.1037/0003-066X.56.3.227

Masten, A. S. (2018). Resilience theory and research on children and families: Past, present, and promise. Journal of Family Theory & Review, 10(1), 12–31. https://doi.org/10.1111/jftr.12255

Mikulincer, M., & Shaver, P. R. (2007). Attachment in adulthood: Structure, dynamics, and change. Guilford Press.

Mruk, C. J. (2006). *Self-esteem research, theory, and practice* (3rd ed.). Springer.

Özçelik Herdem, D. (2018). *Güzel Sanatlar Bölümü ile diğer bölüm öğrencilerinin benlik saygılarının karşılaştırılması: Gazi Üniversitesi Eğitim Fakültesi örneği*. Journal of Turkish Studies. 13(27). 1129–1147.

Özkara, A. B., & Özbay, S. (2019). Lise Düzeyindeki Sporcu Öğrencilerin Psikolojik Sağlamlıklarının İncelenmesi. Milli Eğitim Dergisi. 48(221). 207-214.

Reddy, R. C., & Berhanu, T. (2016). Mental toughness in sport: In case of Mekelle university sport teams. International Journal of Applied Research. 2(3). 1-3.

Rogers, C. R. (1959). *A theory of therapy, personality, and interpersonal relationships*. McGraw Hill.

Rosenberg, M. (1965). Society And The Adolescent Self-_Mage. NJ: Princeton University Pres. Princeton.

Rosenberg, M. (1965). *Society and the adolescent self-image*. Princeton University Press.

Saka, A., & Ceylan, Ş. (2018). Ergenlerin Psikolojik Dayanıklılık Düzeylerinin Aile Yapılarına Göre İncelenmesi. Eğitim ve Toplum Araştırmaları Dergisi. 5(1). 68-86.

Sankır, H. (2014). *Gençlerin sapmış ve suçlu davranışlara yönelmelerinde benlik saygısının etkisi: Lise 11. sınıf örneği*. Journal of Turkish Studies. 9(2). 1311–1333.

Sarkar, M., & Fletcher, D. (2014). Psychological resilience in sport performers: A review of stressors and protective factors. Journal of Sports Sciences, 32(15), 1419–1434. https://doi.org/10.1080/02640414.2014.901551

Schermelleh-Engel, K., Moosbrugger, H., & Müller, H. (2003). Evaluating the fit of structural equation models: Tests of significance and descriptive goodness-of-fit measures. *Methods of Psychological Research Online, 8*(2), 23–74.

Seligman, M. E. P. (2011). Flourish: A visionary new understanding of happiness and well-being. Free Press.

Southwick, S. M., Bonanno, G. A., Masten, A. S., Panter-Brick, C., & Yehuda, R. (2014). Resilience definitions, theory, and challenges: Interdisciplinary perspectives. European Journal of Psychotraumatology, 5(1), 25338. https://doi.org/10.3402/ejpt.v5.25338

Soylu, Y. (2018). Boşanmış kadınlarda psikolojik sağlamlığı açıklamaya yönelik bir model geliştirme. Turkish Psychological Counseling and Guidance Journal. 8(49). 81-100.

Söğütlü, L., İmamoğlu, A. H., Çelik, A. R., & Karabulut, Y. (2021). Çalışan üniversite öğrencilerinin benlik saygısı ve psikolojik dayanıklılık düzeylerinin incelenmesi. Uluslararası Hukuk ve Sosyal Bilim Araştırmaları Dergisi. 3(1). 36-46.

Tabachnick, B. G., & Fidell, L. S. (2013). Using multivariate statistics, 6th edn Boston. Ma: Pearson.

Tavakol, M., & Dennick, R. (2011). Making sense of Cronbach's alpha. International journal of medical education. 2. 53.

Terzi, Ş. (2006). Kendini toparlama gücü ölçeği'nin uyarlanması: Geçerlilik ve güvenirlik çalışmaları. Türk Psikolojik Danışma ve Rehberlik Dergisi. 3(26). 77-86.

Windle, G. (2011). What is resilience? A review and concept analysis. Reviews in Clinical Gerontology, 21(2), 152–169. https://doi.org/10.1017/S0959259810000420